TURN SIGNAL AND HAZARD WARNING LIGHT (EUROPE)

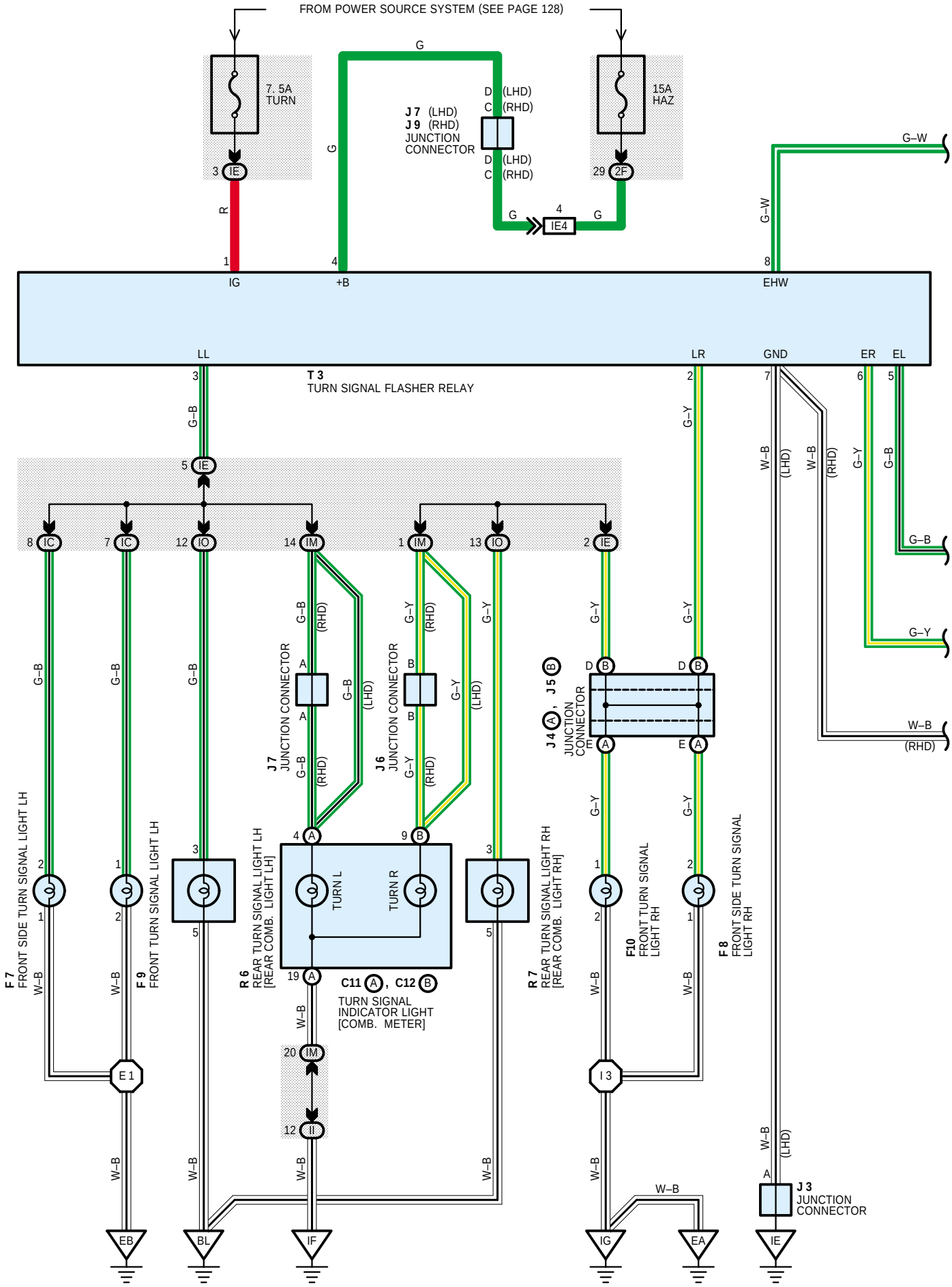

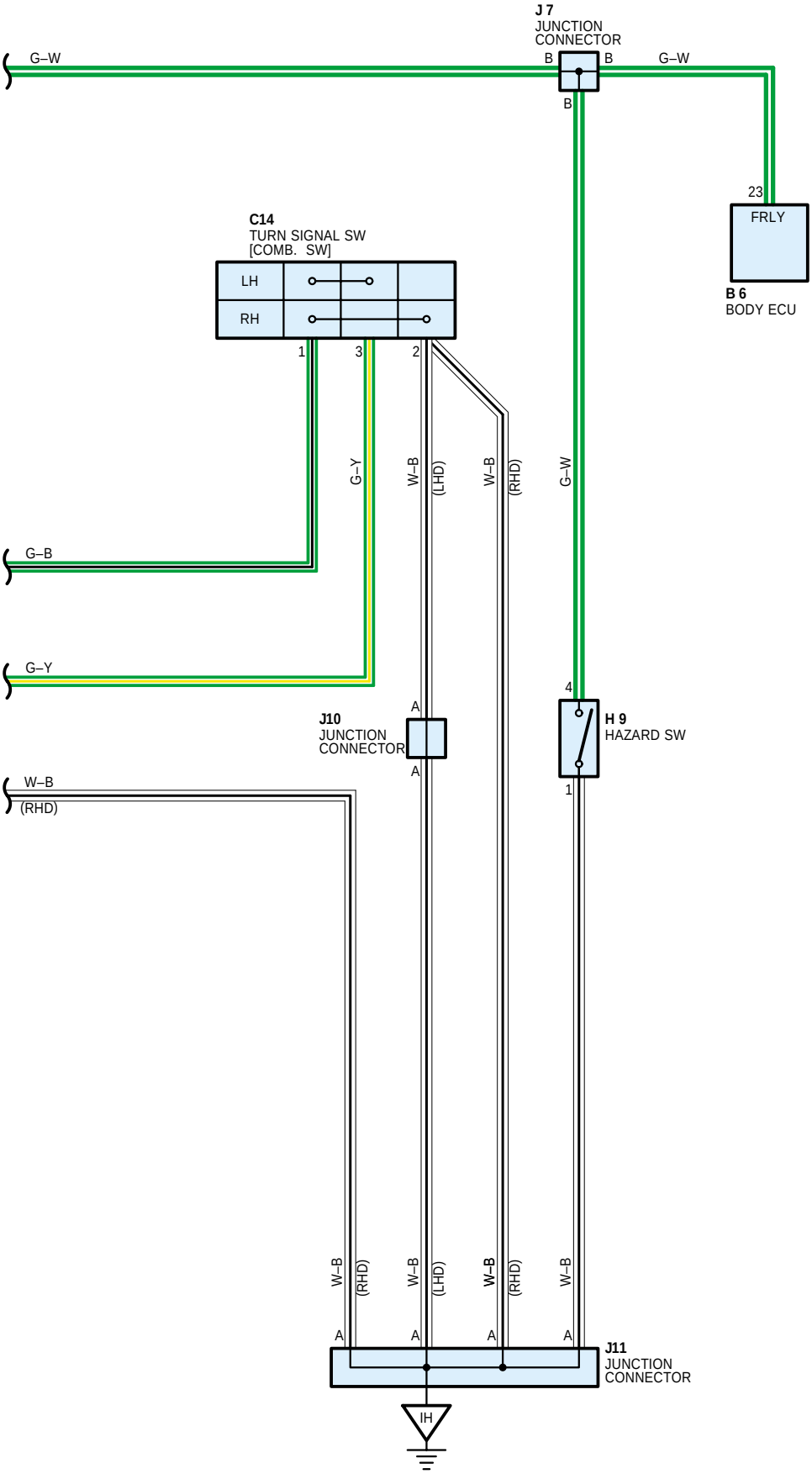
J 7
JUNCTION
CONNECTOR
G–W
B
B
G–W
B
23
FRLY
B 6
BODY ECU
C14
TURN SIGNAL SW
[COMB. SW]
LH
RH
1
3
2
G–Y
W–B
(LHD)
W–B
(RHD)
G–W
G–B
G–Y
4
A
J10
JUNCTION
CONNECTOR
A
H 9
HAZARD SW
1
W–B
(RHD)
W–B
(RHD)
W–B
(LHD)
W–B
(RHD)
W–B
A
A
A
A
J11
JUNCTION
CONNECTOR
IH